Assessment of Fuel Economy Technologies Medium- & Heavy-Duty Vehicles : An Overview of the National Academies Study

Committee Chair – Dr. Andrew Brown Jr.

2011 TRB Conference
Reducing Energy Use & Emissions from the Freight Sector
Technical & Operational Advancements Related to Heavy-Duty Vehicles

Washington Hilton – Session 376
3:45 – 5:30 pm – Columbia Hall 6
January 24, 2011

DELPHI

Outline

- Introduction & Background
  - Charter, Mandates & Tasks
  - Schedule & Challenges
  - Committee Report End Products
- Organization & Execution
  - Committee Members
  - Teams, Consultants & Site Visits
- Vehicle Fundamentals, Fuel Consumption & Emissions
  - Scope
- Technologies & Costs of Reducing Fuel Consumption
- Indirect Effects & Externalities
- Alternative Approaches
- Approaches to Fuel Economy & Regulations
- Overarching Recommendation
- Reviews & Regulatory Status

DELPHI

Legislative Charter

Energy Independence and Security Act of 2007 Requirements:

- Section 108
  - NHTSA engage National Academies to develop a report that evaluates MD and HD vehicle fuel economy.

- Section 102
  - NHTSA conduct its own study on the fuel efficiency of commercial MD and HD on highway vehicles and work trucks.
  - NHTSA conduct rulemaking to implement a commercial MD and HD on-highway vehicle and work truck fuel efficiency improvement program.

DELPHI

Study Tasks – Conduct Assessment and Develop Report

- Assessment of technologies and costs to evaluate fuel economy for MD and HD trucks.
- Analysis of existing and potential technologies that may be used practically to improve MD and HD fuel economy.
- Analysis of how such technologies may be practically integrated into the MD and HD truck manufacturing.
- Assessment of how such technologies may be used to meet fuel economy standards.
- Associated costs and other impacts on the operation of MD and HD trucks, including congestion.

DELPHI

Schedule & Other Challenges

- Complete effort within 15 months (FINAL report to be delivered by March 2010).
- Coordinate activities with DOT/NHTSA to facilitate rulemaking process which should be complete by Spring 2010.
- Provide data, information and guidance similar to Chapter 3 of Light Duty Vehicle Report – (NRC, 2002).
- Develop appropriate metrics of fuel economy vs. fuel efficiency for vehicle usage with varying use and duty cycles.
- Required competencies: diesel engine technology; fuels; combustion; materials; emission control technologies; vehicle systems engineering; R&D management; truck operations and management; design and manufacturing; mechanical engineering; commercialization; advanced HD vehicles; safety; truck industry; fuel economy standards and policy; testing procedures; economics.

DELPHI

Official Committee End-Products

- National Academies Main Report – Technologies and Approaches to Reducing the Fuel Consumption of Medium- & Heavy-Duty Vehicles
  - Approx. 415 pages

<u>Consultant Reports</u>

- TIAX Report – Assessment of Fuel Economy Technologies for Medium- & Heavy-Duty Vehicles
  - 182 pages
- Argonne Report – Evaluation of Fuel Consumption Potential of Medium- & Heavy-Duty Vehicles Through Modeling & Simulations
  - 109 pages
- Cambridge Systematics & Eastern Research Group (ERG) Commissioned Papers on Indirect Costs & Alternative Approaches
  - 45 pages

DELPHI

Committee Members

Dr. Andrew Brown, Jr.
Exec. Director & Chief Technologist
Delphi Corporation

Dr. Dennis Assanis
Prof. & Director, Auto Research Center
University of Michigan

Dr. Nigel Clark
Prof. & Director Center for Alternative Fuels, Engines & Emissions
West Virginia University

Duke Drinkard
VP, Maintenance (Ret.)
Southeastern Freight Lines
Lexington, SC 29073

Dr. Roger Fruechte
Director, Electrical & Controls Integration Lab
General Motors R&D (Ret.)

Dr. Roger Bezdek
President
Management Information Svcs.
Oakton, Virginia

Thomas Corsi
Director, Supply Chain Mgmt., Logistics, Business & Public Policies
University of Maryland

Dr. David Foster
Prof. & Director, Engine Research Center
University of Wisconsin

Dr. Ron Graves
Director, Fuels, Engines & Emissions Research Center
DOE/ORNL

Dr. John Johnson
Presidential Professor
Michigan Tech University
Houghton, Michigan

DELPHI

Committee Members

Drew Kodjak
Executive Director
International Council on Clean Transportation
Washington, DC

Tom Reinhart
Program Manager, Engine Design & Development
Southwest Research Institute

Dr. James Winebrake
Chair, Dept. of Science, Technology & Public Policy
Rochester Institute of Technology

Dr. Martin Zimmerman
Professor of Business Administration
University of Michigan

David Merrion
Exec. VP, Detroit Diesel (Ret.)
Detroit, Michigan

Dr. Charles Salter
Exec. Director, Engine Development (Ret.)
Mack Trucks / Volvo Powertrain

John Woodrooffe
Head, Transportation Safety Analysis
University of Michigan Transportation Institute

Garrick Hu
VP, Global Engineering (Ret.)
Arvin Meritor

Aymeric Rousseau
Manager, Advanced Powertrain Vehicle Modeling Team
Argonne National Research Lab

DELPHI

Organization & Execution

Committee organized into 4 working groups focused on individual tasks outlined in its charter. Each responsible for task work, coordination, and schedule. Also tasked four consultants as follows:

- TIAX, LLC – Developed detailed forecasts of fuel consumption reducing technologies
  - Supported evaluation of MD & HD vehicle technologies by researching the technologies and their costs through intensive interviews of manufacturers, fleet owners and others to produce a detailed matrix relating technologies and vehicle types over time.
  - Developed a detailed matrix of fuel saving technologies, their fuel consumption benefits, and their costs.
  - Focused on ten-year timeframe
  - Arranged specific site visits

DELPHI

Organization & Execution

- Argonne National Labs – Modeling & Simulation
  - Provided data to support rulemaking on MD & HD vehicle fuel consumption
  - Provided modeling and simulation analysis of technologies now and into the future for eight vehicle applications; i.e., pickup truck, van, delivery straight truck, bucket truck, combination truck or trailer, refuse hauler, urban bus, and intercity highway bus

- Cambridge Systematics & ERG
  - Examined possible consequences or side-effects of fuel economy standards or of technologies to improve fuel efficiency
  - Examined alternative approaches to improving fuel efficiency

DELPHI

Organization & Execution

- Industry, Agency, Research & User Site Visits (21)
  - UMTRI, Ford Motor, Azure Dynamics, ISE Corp.
  - Arvin Meritor, Navistar, Allison Transmission
  - PACCAR (Peterbuilt Trucks), Auto Research Center, EPA
  - SWRi, Detroit Diesel, Eaton Corp., TARDEC, Volvo Trucks
  - Cummins, Great Dane Trailers, Walmart, TRC
  - DOT/NHTSA

- Comprehensive report submitted by target date. Report contains summary, eight chapters and approximately 75 findings and 20 recommendations with 27 major findings and 12 major recommendations.

DELPHI

Vehicle Fundamentals & Fuel Consumption

Scope

- MHDVs represent 26% of all U.S. liquid transportation fuels
- Increased more than consumption for other sectors

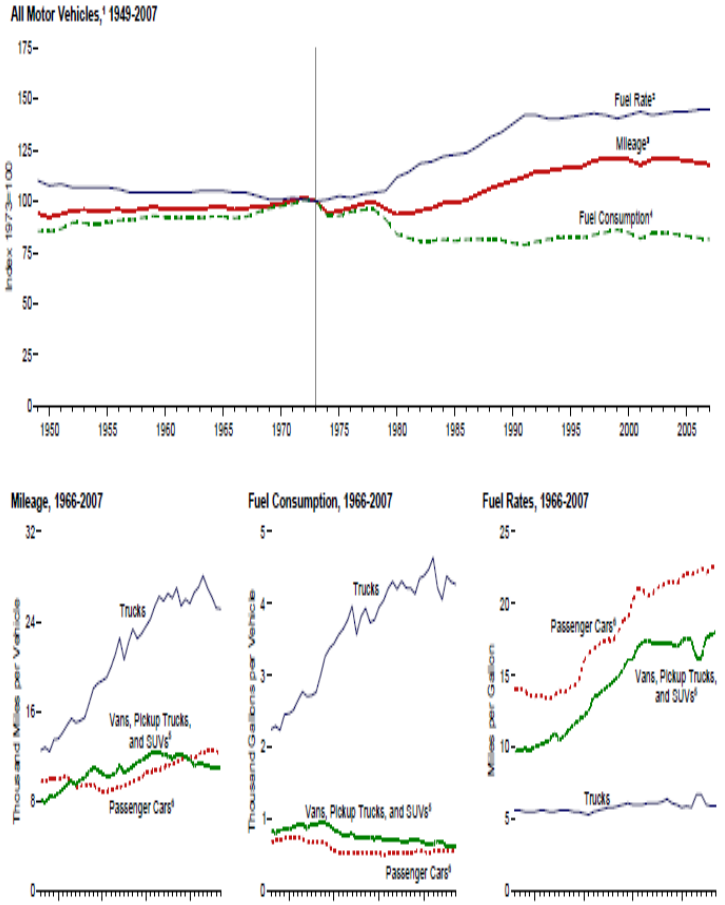

DELPHI

Manageable Level of Detail Needed for Technology Assessment

- Over 100 basic configurations listed by a single manufacturer
- Many options within each configuration create thousands of potential truck specs
- ~10x range of vehicle mass
- ~Dozen representative duty cycles
- Engine, chassis, driveline, body from different manufacturers
- Sales spread across ~10 major manufacturers, final body fit by many more

DELPHI

Approaches to Fuel Consumption Reduction & Regulations

U.S. Medium and Heavy Duty Vehicle Population, Mileage and Fuel Use by Weight Class						
Vehicle Size	**Population [millions]**	**Annual Miles [million miles]**	**Annual Fuel Use [million gallons]**	**% of Population**	**% of Annual Miles**	**% of Fuel Use**
Class 2B	5.800	76,700	5,500	52.8%	35.1%	19.3%
Class 3	0.691	9,744	928	6.3%	4.5%	3.3%
Class 4	0.291	4,493	529	2.6%	2.1%	1.9%
Class 5	0.166	1,939	245	1.5%	0.9%	0.9%
Class 6	1.710	21,662	3,095	15.6%	9.9%	10.9%
Class 7	0.180	5,521	863	1.6%	2.5%	3.0%
Class 8	2.154	98,522	17,284	19.6%	45.1%	60.8%
TOTAL	**10.992**	**218,580**	**28,444**	**100%**	**100%**	**100%**

SOURCE: Class 3 - 8 - U.S. Department of Commerce, Bureau of the Census, 2002 Vehicle Inventory and Use Survey; Class 2B - Davis, S.C. and L.F. Truett, Investigation of Class 2b Trucks (Vehicles of 8,500 to 10,000 lbs GVWR), ORNL/TM-2002/49, March 2002, Table 16. Class 3 - 8, 2002 Population; Class 2b, 2000 population

DELPHI

Eight Configurations Carried Though the Study

Chosen scope

- Selected vehicle & duty cycles which represent sectors, wide range
- Class 8; Tractor Trailer and refuse truck
- Class 3-6; Box Truck and bucket truck
- Class 2b; Pickup/Van
- Transit Bus, Motor Coach

Light-Duty		*Medium Heavy-Duty*				*Heavy-Duty*	
Class 1	Class 2	Class 3	Class 4	Class 5	Class 6	Class 7	Class 8
Less than 6,000 lb	6,000 to 10,000 lb	10,000 to 14,000 lb	14,000 to 16,000 lb	16,000 to 19,500 lb	19,500 to 26,000 lb	26,000 to 33,000 lb	Greater than 33,000 lb

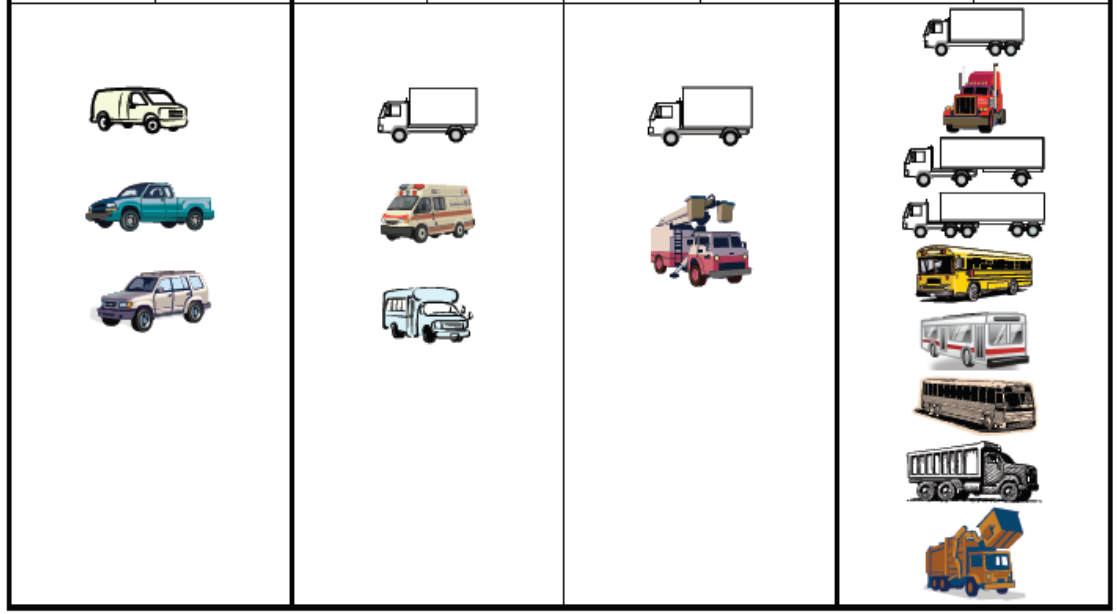

Figure 2.1 Truck Weight Classes

DELPHI

MHDV Power and Energy Basics

$$P_{RL} = mgC_{rr}V + 0.5C_DA\rho_aV^3 + mV(dV/dt) + mg\sin(\theta)V$$

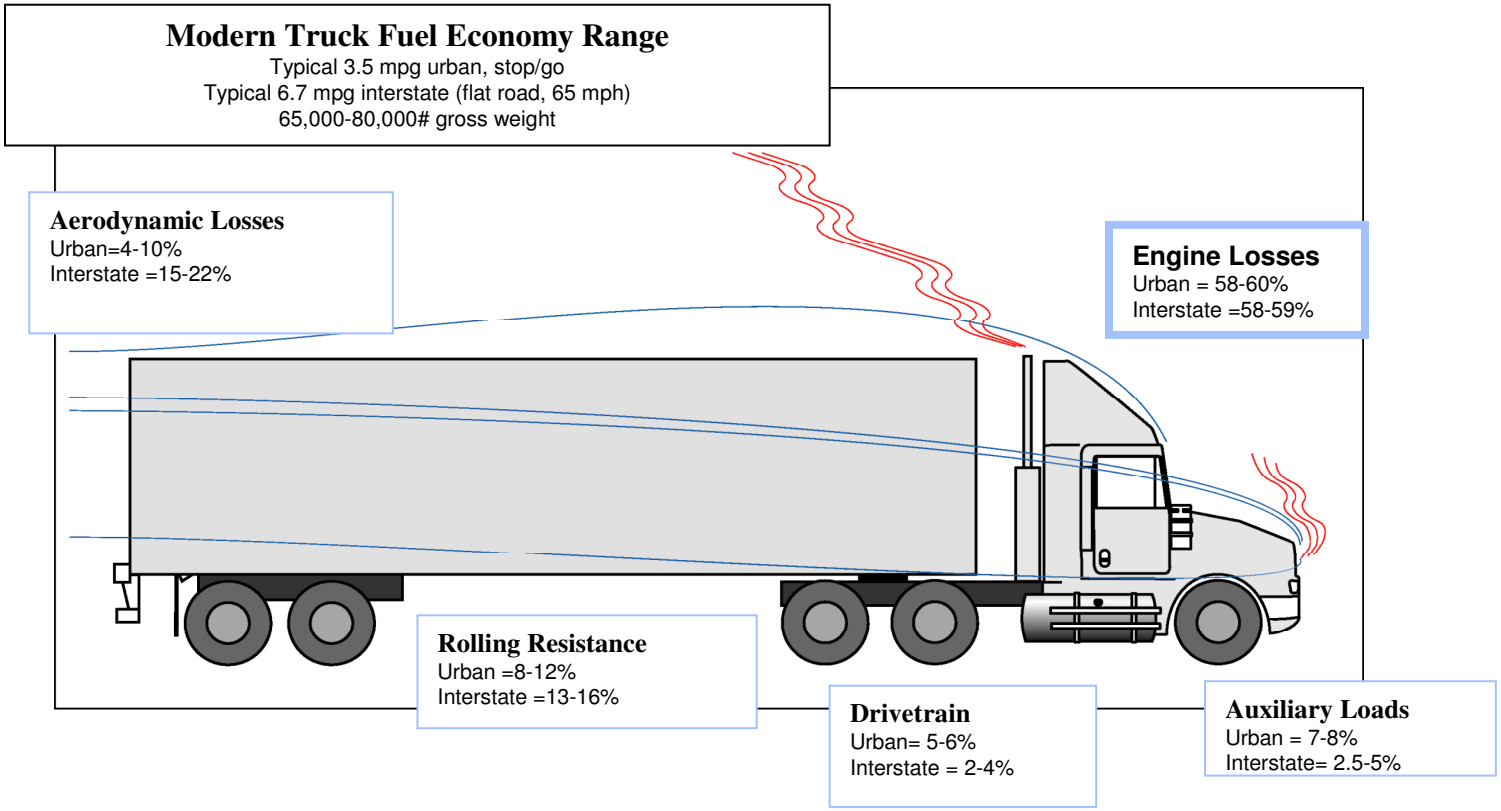

DELPHI

Cycle Selection

Selection of cycle key part of regulation development. Large impact on fuel consumption as well as the effects of various technologies

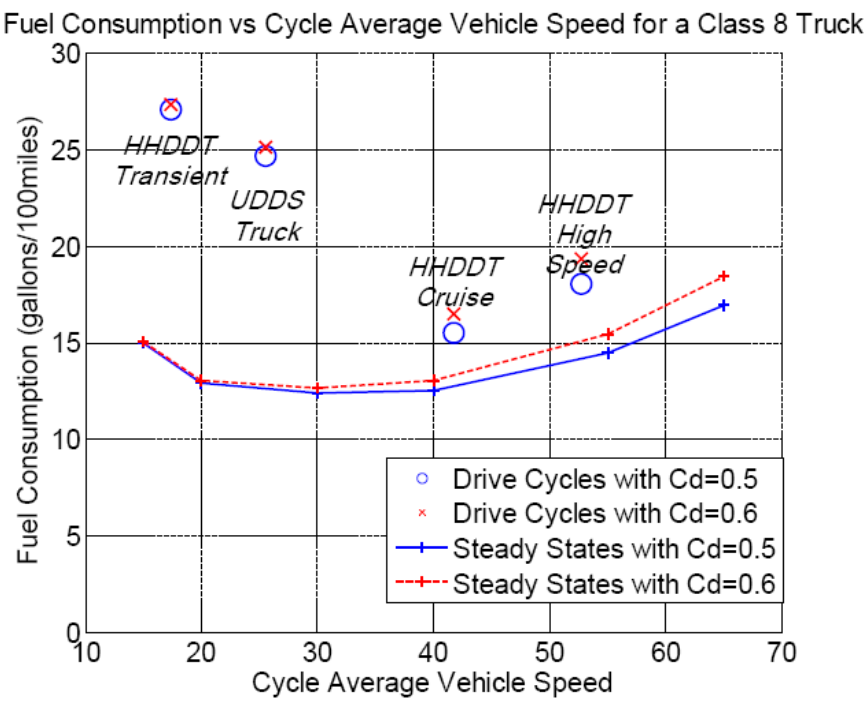

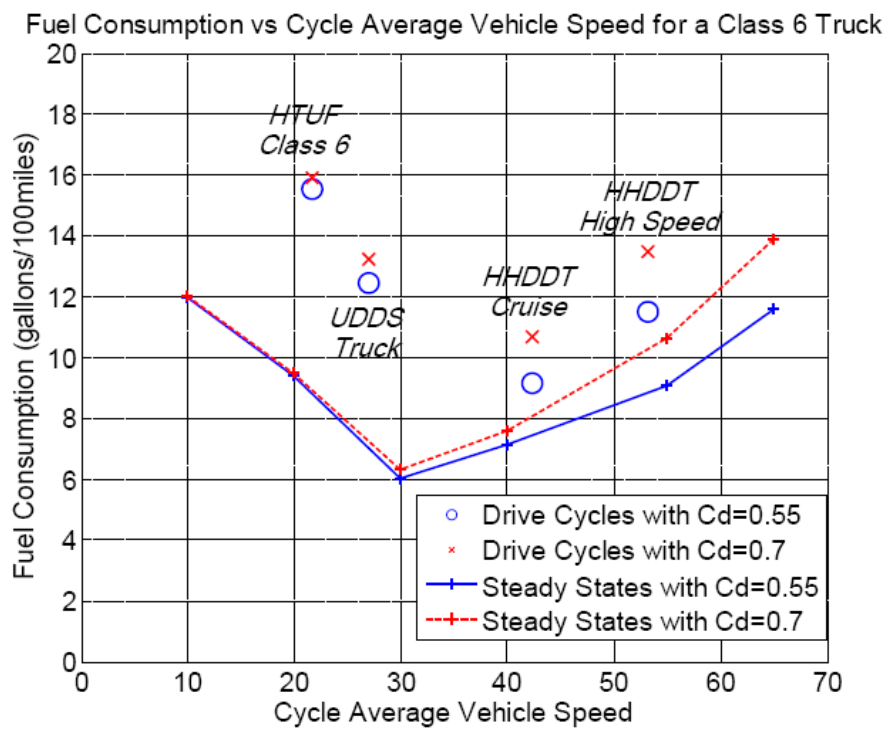

Results from ANL modeling study for the NAS

DELPHI

MHDV Modeling and Simulation

Used in study and recommended for regulatory process

- Reviewed state of art in expert panel discussion second meeting in study and in site visits
- Cited ongoing and recent model results to augment test data (effects of technologies)
- Engaged ANL to conduct new simulation study for the report
- Reviewed uses of models in current and conceptual regulatory approaches

DELPHI

Continued Progress in Capabilities and Uses of Models -Some Caveats Remain

- Good fuel consumption prediction, widely used in spec'ing tools, handle many design parameters
  - Tires, aero, mass, cycles, hybrid controls, engine map features
- Accelerated development of control algorithms, valuable in HIL-CIL evaluations
- Use in certification process (Chapter 3, 8) recommended

- Require input data from tests (aero, tires, etc). Results only as good as input data.
- Driver model critical
- Models less capable in predicting criteria emissions and handling extreme ambient temp conditions. Can impact accuracy of fuel consumption estimates.

DELPHI

Measuring Fuel Consumption in Payload Terms (gallons/ton-mile)

Load Specific Fuel Consumption

(LSFC)= FC/Payload *in Tons*

FC = Fuel Consumption on a given cycle, gallons/100 miles

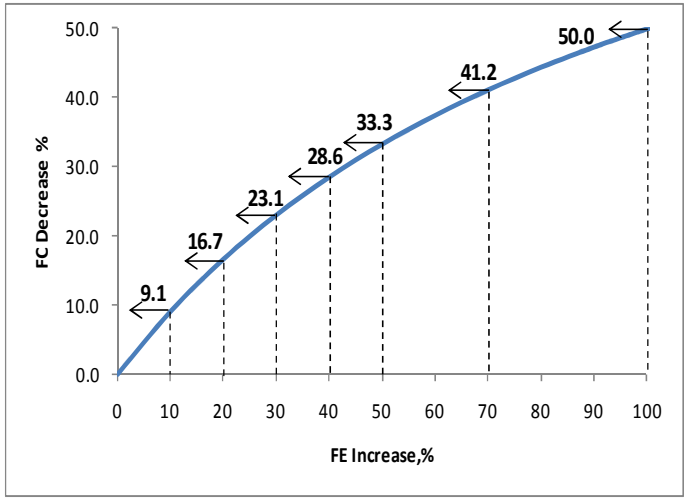

Recommendation 2-1

Any regulation of MHDVs fuel consumption should use LSFC as the metric and be based on using an average (or typical) payload based on national data representative of the classes and duty cycle of the vehicle. Standards might require different values of LSFC due to the various functions of the vehicle classes, e.g., buses, utility, line haul, pickup and delivery, etc. Regulators need to use a common procedure to develop baseline LSFC data for various applications, to determine if separate standards are required for different vehicles that have a common function. Any data reporting or labeling should state a LSFC value at specified tons of payload.

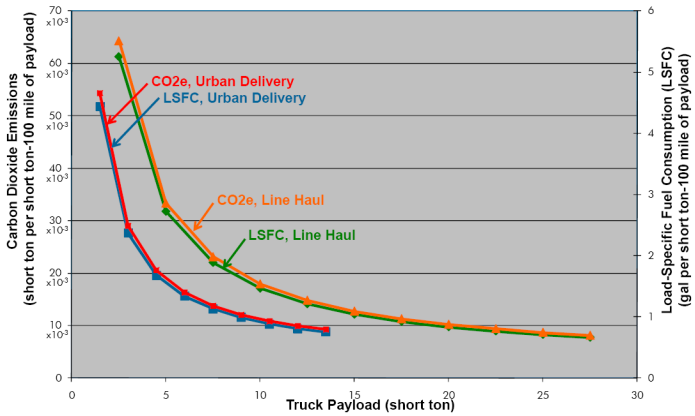

#7

DELPHI

Technologies & Costs of Reducing Fuel Consumption

TABLE S-1.
Range of Fuel Consumption Reductions Potential, 2015-2020 for Powertrain Technologies.

Technology	Percentage Fuel Consumption Reduction
Diesel Engines	15 to 21
Gasoline Engines	up to 24
Diesel over Gasoline Engines	6 to 24
Improved Transmissions	4 to 8
Hybrid Powertrain	5 to 50

TABLE S-2.
Range of Fuel Consumption Reduction Potential, 2015-2020, for Vehicle Technologies.

Technology	Percent Fuel Consumption Reduction
Aerodynamics	3 to 15
Auxiliary Loads	1 to 2.5
Rolling Resistance	4.5 to 9
Mass (Weight) Reduction	2 to 5
Idle Reduction	5 to 9
Intelligent Vehicle	8 to 15

DELPHI

Technologies for Fuel Consumption Reduction Applicable to Gasoline-Powered Engines for Medium-Duty Vehicles and Estimated Fuel Consumption Reductions and Incremental Costs

Technology	Incremental to…	Incremental Cost and Benefit	
		Percent Fuel Consumption Benefit	Cost
Friction reduction	—	0.5–2.5	$110–$500[a]
Variable valve timing (VVT)	Friction	1–3	$122
Variable valve lift (VVL)[b]	VVT	1–3.5	$400–$750
Cylinder deactivation[c]	VVL	2.5–3	$75
Stoichiometric GDI[d]	Cylinder deactivation	2–3	$512–$930
Turbocharging and downsizing	S-GDI	2.1–2.2	$1,229
Diesel[e]	—	19–24	$7,900–$9,400
Lean-burn GDI	S-GDI	10–14	$750[f]
Gasoline HCCI	S-GDI	10–12	$685
Accessory electrification	Applicable to any package	2–4	$1,000–$2,000 (current) $500 (high volume)

Hybrid Fuel Consumption Potential Reductions, Compared to a Baseline Vehicle Without a Hybrid Powertrain, by Range of Years and Application

	2013-2015	2015-2020
Tractor trailer	N.A	10%
Class 6 box truck	22%	30%
Class 6 bucket truck	35%	40%
Refuse truck	20%	25%
Urban bus	30%	35%
Motor coach	N.A	N.A.
Class 2b pickup and van	N.A	18%

N.A.: not applied.

Fuel Consumption Reduction Potential for Hybrid Powertrains

Tractor trailer	5-10% [a]
Class 6 box truck	20-35%
Class 6 bucket truck	30-45%
Refuse truck	20-35%
Urban bus	12-50%
Motor coach	5-40%
Class 2b pickup and van	18-30%

[a] Includes some reduction in hotel load, some idle reduction, and some electrification of accessories.

DELPHI

Aerodynamic Related Fuel Consumption Reduction Packages by Sector and by Time Frame

Sector	2013 - 2015	2015 – 2020
Tractor Trailer	5.5%	11.5%
Class 6 Box Truck	0	6 %
Class 6 Bucket Truck	0	0
Motor Coach	0	8%
Class 2b Pickup/Van	3%	3%

DELPHI

Rolling Resistance Fuel Consumption Reduction Potential by Class

Truck Class	2013-2015 Fuel Consumption Benefit Relative to Baseline	2016-2020 Fuel Consumption Benefit Relative to Baseline	Assumptions
Class 8 Tractor Trailer	4.5%	11%	Base C_{rr} 0.0068 2013=.0055 2016=.0045 on more axles
Class 6 Box Truck	1.8%	3%	same
Class 6 Bucket Truck	1.4%	2.4%	same
Refuse Truck	1.5%	2.5%	WBS not used
Urban Bus	1.0%	1.5%	WBS not used
Motorcoach	1.8%	3%	WBS not used
Class 2b Pickup and Van	1.0%	2%	10% C_{rr} reduction

DELPHI

Technologies & Costs of Reducing Fuel Consumption

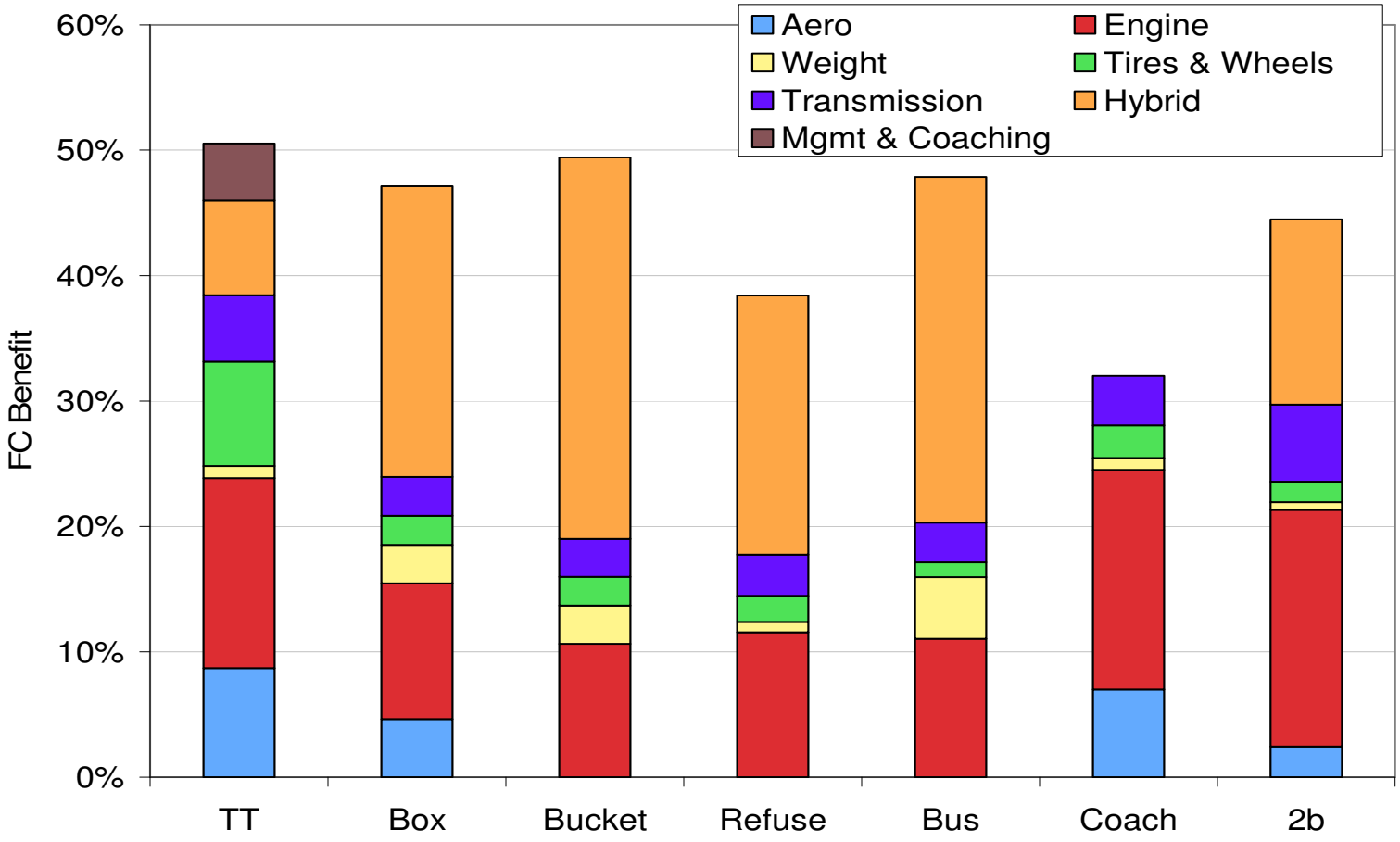

FIGURE S-1 Comparison of 2015-2020 New Vehicle Potential Fuel Savings Technology for Seven Vehicle Types: Tractor Trailer (TT), Class 3-6 Box (Box), Class 3-6 Bucket (Bucket), Class 8 Refuse (Refuse), Transit Bus (Bus), Motor Coach (Coach), and Class 2b Pickups and Vans (2b). Also, for each vehicle class, the fuel consumption benefit of the combined technology packages is calculated as follows: % FCpackage = 1 – (1 - %FCtech 1)(1 - %FCtech2)(1 - %FCtech N) where %FCtech x is the percent benefit of an individual technology.
SOURCE: TIAX (2009) at ES-4

DELPHI

Technologies & Costs of Reducing Fuel Consumption

TABLE S-3. Fuel Consumption Reduction Potential for Typical New Vehicles in 2015-2020 and Effectiveness Comparisons for Seven Vehicle Configurations.

Vehicle Class	Fuel Consumption Reduction, Percent	Midrange Capital Cost, Dollars	Cost Effectiveness Metric		
			Dollars per percent fuel saved	Dollars per gallon saved per year	Breakeven fuel price, [a] dollars per gallon
Tractor-Trailer	51	$84,600	$1,670	$7.70	$1.10
Class 6 Box Truck	47	$43,120	$920	$29.30	$4.20
Class 6 Bucket Truck	50	$49,870	$1,010	$37.80	$5.40
Class 2b Pickup	45	$14,710	$330	$33.70	$4.80
Refuse Truck	38	$50,800	$1,320	$18.90	$2.70
Transit Bus	48	$250,400	$5,230	$48.00	$6.80
Motor Coach	32	$36,350	$1,140	$11.60	$1.70

[a] Calculated assuming a 7 percent discount rate and a 10-year life, excluding incremental operating and maintenance costs associated with the technologies. NOTE: Numbers in last three columns are rounded. Also, these point estimates will vary depending on input assumptions. For each vehicle class, the fuel consumption benefit of the combined technology packages is calculated as follows:
$\%FCR_{package} = 100\ [1 - \{\%FCR_{tech1} / 100\})\ (1 - \%FCR_{tech\ 2} /100)\} \ldots \{(1 - \%\ FCR_{techN} / 100\})]$

SOURCE: Adapted from TIAX (2009).

DELPHI

Fuel Consumption Improvement, Cost & CCPPR, 2015 to 2020 Vehicle Technology

TABLE 6-18. Fuel Consumption Improvement, Cost, and CCPPR, 2015 to 2020 Vehicle Technology

	TT	Box	Bucket[d]	Refuse	Bus	Coach	2b
Fuel Consumption Reduction							
Aero	11.5%	6%	—	—	—	8%	3%
Engine	20%	14%	11.2%	14%	14%	20%	23%
Weight	1.25%	4%	3.2%	1%	6.25%	1.05%	0.75%
Tire	11%	3%	2.4%	2.5%	1.5%	3%	2%
Transmission	7%	4%	3.2%	4%	4%	4.5%	7.5%
Hybrid	10%	30%	40%	25%	35%	—	18%
Mgmt	6%	—	—	—	—	—	—
Idle Reduction[a]	—	—	—	—	—	—	—
Subtotal[b]	51.0%	49.4%	51.3%	40.2%	50.4%	32.5%	44.9%
Added Wt (lb)[c]	2,030	1,100	1,050	1,500	2,000	1,100	300
Adj. FC Total	**50.5%**	**47.1%**	**49.6%**	**38.4%**	**47.8%**	**32.0%**	**44.5%**
Capital Cost							
Aero	$ 12,000	$ 3,250	$ -	$ -	$ -	$ 4,500	$ 100
Engine	$ 23,000	$ 13,000	$ 13,000	$ 14,800	$ 13,000	$ 23,000	$ 4,000
Weight	$ 13,500	$ 4,770	$ 4,770	$ 3,000	$ 15,300	$ 6,000	$ 600
Tire	$ 3,600	$ 300	$ 300	$ 300	$ 300	$ 450	$ 10
Transmission	$ 5,800	$ 1,800	$ 1,800	$ 2,700	$ 1,800	$ 2,400	$ 1,000
Hybrid[d]	$ 25,000	$ 20,000	$ 30,000	$ 30,000	$ 220,000	$ —	$ 9,000
Mgmt	$ 1,700	$ —	$ —	$ —	$ —	$ —	$ —
Idle Reduction[a]	$ —	$ —	$ —	$ —	$ —	$ —	$ —
Total	**$ 84,600**	**$ 43,120**	**$ 49,870**	**$ 50,800**	**$ 250,400**	**$ 36,350**	**$ 14,710**
CCPPR ($/% Fuel Consumption Benefit)							
Aero	$ 1,043	$ 542	$ -	$ -	$ -	$ 563	$ 33
Engine	$ 1,150	$ 929	$ 929	$ 1,057	$ 929	$ 1,150	$ 174
Weight	$ 10,800	$ 1,193	$ 1,193	$ 3,000	$ 2,448	$ 5,714	$ 800
Tire	$ 327	$ 100	$ 100	$ 120	$ 200	$ 150	$ 5
Transmission	$ 829	$ 450	$ 450	$ 675	$ 450	$ 533	$ 133
Hybrid	$ 2,500	$ 667	$ 750	$ 1,200	$ 6,286	$ —	$ 500
Mgmt	$ 283	$ —	$ —	$ —	$ —	$ —	$ —
Idle Reduction[a]	$ —	$ —	$ —	$ —	$ —	$ —	$ —
All Packages	**$ 1,674**	**$ 915**	**$ 1006**	**$ 1,323**	**$ 5,232**	**$ 1,135**	**$ 331**

DELPHI

Indirect Effects & Externalities

Committee examined:

- Rate of replacement of older vehicles
- Fleet turnover impacts
- Increased ton-miles shipped due to the lower cost of shipping
- Rebound effect
- Purchasing one class of vehicle rather than another in response to a regulatory change (Vehicle Class Shifting)
- Environmental Co-Benefits & Costs
- Congestion, Safety & Costs
- Congestion, Safety & Incremental Weight Impacts

DELPHI

General Findings

Finding 6-9.

A number of indirect effects and unintended consequences associated with regulations aimed at reducing fuel consumption in the trucking sector can be important. In particular, regulators should consider the following effects in the development of any regulatory proposals: rate of replacement of older vehicles (fleet turnover impacts), increased ton-miles shipped due to the lower cost of shipping (rebound effect), purchasing one class of vehicle rather than another in response to a regulatory change (vehicle class shifting), environmental co-benefits and costs, congestion, safety, and incremental weight impacts.

Fleet Turnover Effects

- Increasing new vehicle costs
  - Accelerate purchase (pre-buy)
  - Defer purchase (low-buy)
- If costs are offset with lower operating costs, then these effects may be minimized
- Tax credits or excise tax reductions could be used to minimize the pre-buy/low-buy effects

DELPHI

Fleet Turnover Effects

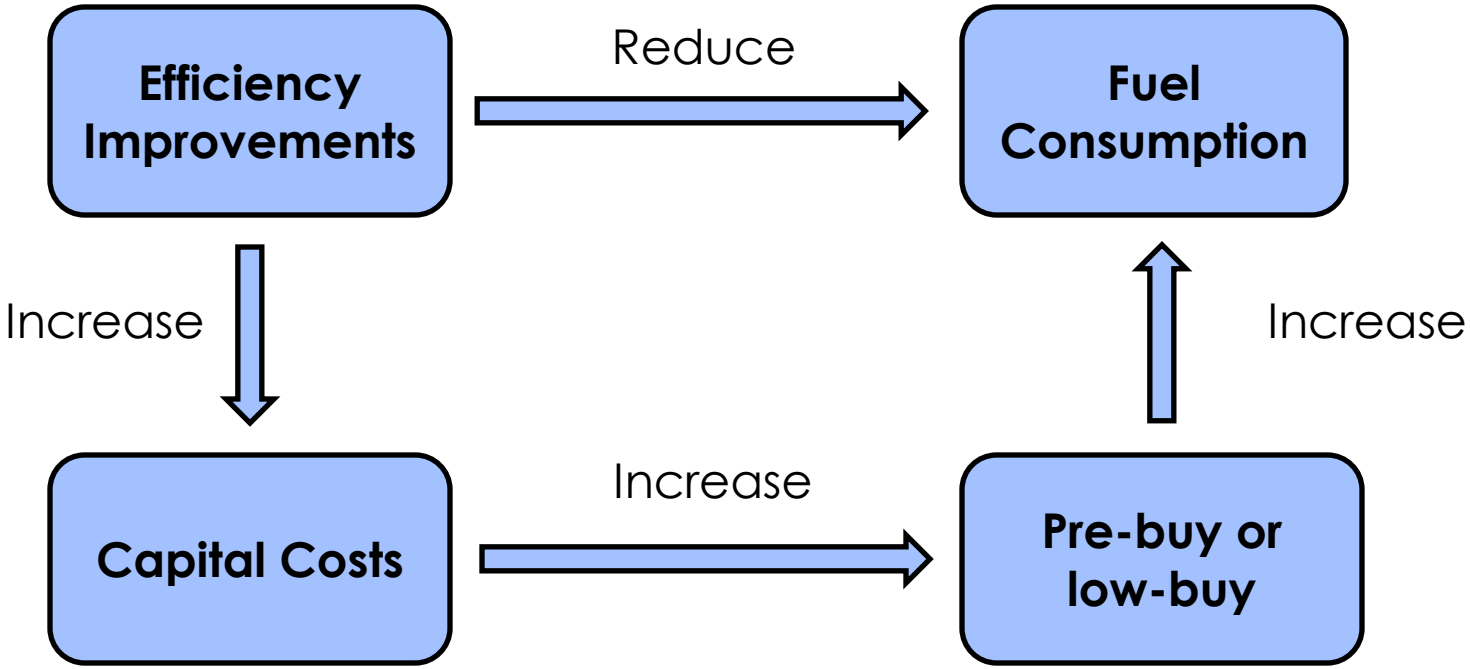

DELPHI

Findings & Recommendations

Finding 6-10.

Consumer buying in anticipation of new regulations (pre-buy) and retention of older vehicles can slow the rate of fleet turnover and the rate at which regulatory standards can affect fleet-wide fuel consumption.

DELPHI

Ton-Miles Traveled and the Rebound Effects

- Extent that cost savings lead to:
  - Increased demand for truck transportation
  - Modal shift from rail to truck
  - Less efficient use of trucks (lighter loads)
- Fair bit of uncertainty in these effects

DELPHI

Rebound Effects

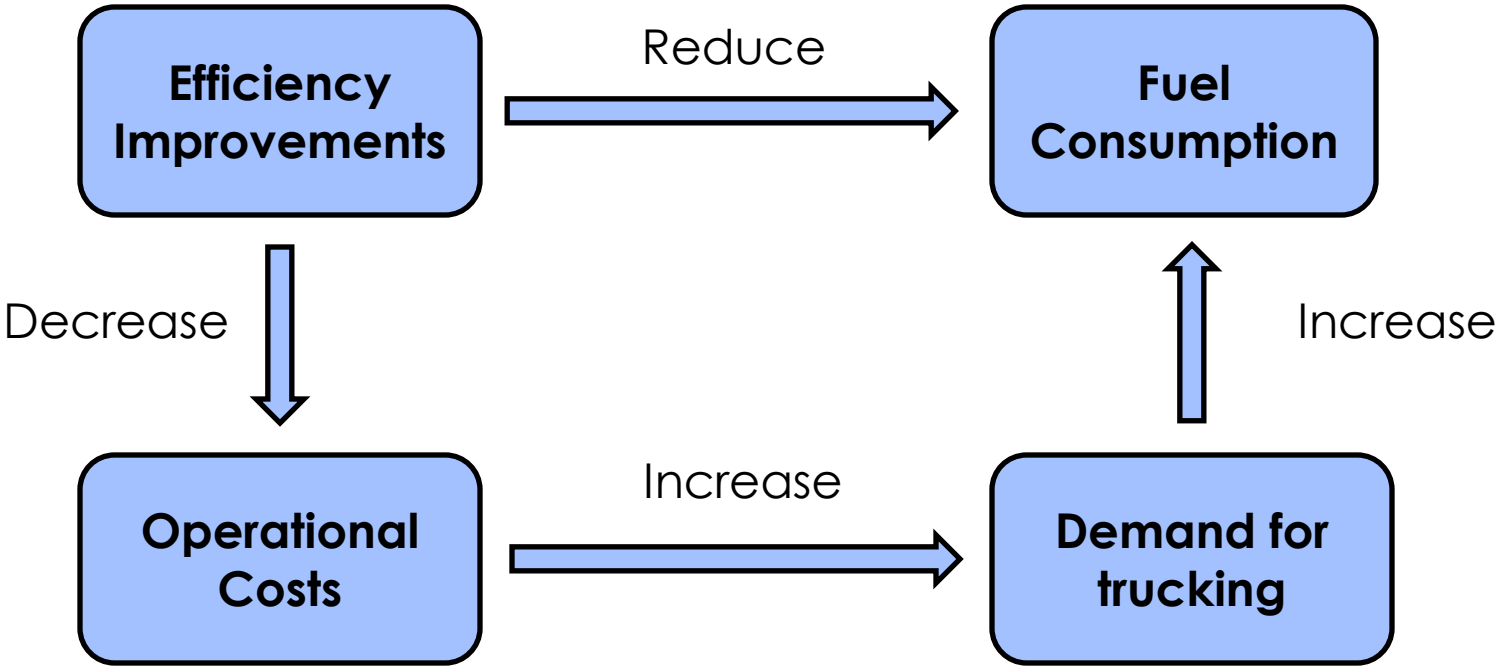

Note that the report is agnostic about whether private costs and freight rates would go up or down as a result of any regulation.

DELPHI

Indirect Effects & Externalities

- **Fleet Turnover Effects**
  - Issue of how new technologies & regulations will affect new vehicle prices & operating costs and the impact on fleet turnover from those cost effects
  - Pre-Buy – Early purchase behavior
  - Low-Buy – Dip in purchases immediately after introduction of vehicles meeting new standard
- **Ton-Miles Traveled & Rebound Effect**
  - Issue of fuel consumption improvements reducing or raising total operating costs
  - Rebound Effect – reductions in cost will lead to truck traffic increases, thereby partially offsetting the individual truck fuel saving
- **Recommendation 6-1.**

  NHTSA, in its study, should do an economic/payback analysis based on fuel usage by application and different fuel price scenarios. Operating and maintenance costs should be part of any study.

DELPHI

Alternative Approaches

- **Committee examined:**
  - Training truck drivers on best practices
  - Adjusting size & weight restrictions on trucks
  - Implementing market based instruments (e.g.fuel taxes)
  - Providing incentives for mode-shifting
  - Developing intelligent vehicle & highway systems

- **Adjusting size & weight restrictions**
  - Increasing size & weight limits offers potentially significant fuel savings for the entire tractor trailer combination truck fleet – Up to 15 percent more
    - Change regulatory limits that currently restrict vehicle weight to 80,000 lbs. & that freeze LCV operations
    - Establish a regulatory structure
    - Consider necessary changes to permit access

DELPHI

Some Illustrative Projections of Fuel Consumption Savings

TABLE 7-1. Some Illustrative Projections of Fuel Consumption Savings

Study	Limit Change	% change in truck VMT	% change in fuel consumption
DOT (2000)	97,000 lb six-axle semis and 131k lb short doubles nationwide	**-11%**	**-6%**
DOT (2000)	148k lb turnpike doubles on interstates nationwide; 124k lb short doubles on most **roads**	**-23%**	**-13%**
TRB (1990a)	89k lb 6-axle semis and 96k lb short doubles nationwide	**-3%**	**-2%**
TRB (1990b)	111k lb short doubles nationwide where compatible with bridges	**-3%**	**-2%**

DELPHI

Alternative Approaches

Recommendation 7-1.

Although the committee recognizes the political difficulty with increasing fuel taxes, it strongly recommends that Congress consider fuel taxes as an alternative to mandating fuel efficiency standards for medium- and heavy-duty trucks.

Recommendation 7-2.

Congress should give serious consideration to liberalizing weight and size restrictions and should consider how the potential fuel savings and other benefits of such liberalization can be realized in a way that maintains safety and minimizes the costs of potential infrastructure changes.

Recommendation 7-3.

The Federal Government should encourage and incentivize the dissemination of information related to the relationship between driving behavior and fuel savings. For example, one step in this direction could be to establish a curriculum and process for certifying fuel-saving driving techniques as part of commercial driver license certification and to regularly evaluate the effects of such a curriculum.

DELPHI

Approaches to Fuel Consumption & Regulations

DELPHI

Regulated Vehicle Types

U.S. Medium and Heavy Duty Vehicle Population, Mileage and Fuel Use by Weight Class						
Vehicle Size	**Population [millions]**	**Annual Miles [million miles]**	**Annual Fuel Use [million gallons]**	**% of Population**	**% of Annual Miles**	**% of Fuel Use**
Class 2B	5.800	76,700	5,500	52.8%	35.1%	19.3%
Class 3	0.691	9,744	928	6.3%	4.5%	3.3%
Class 4	0.291	4,493	529	2.6%	2.1%	1.9%
Class 5	0.166	1,939	245	1.5%	0.9%	0.9%
Class 6	1.710	21,662	3,095	15.6%	9.9%	10.9%
Class 7	0.180	5,521	863	1.6%	2.5%	3.0%
Class 8	2.154	98,522	17,284	19.6%	45.1%	60.8%
TOTAL	**10.992**	**218,580**	**28,444**	**100%**	**100%**	**100%**

SOURCE: Class 3 - 8 - U.S. Department of Commerce, Bureau of the Census, 2002 Vehicle Inventory and Use Survey; Class 2B - Davis, S.C. and L.F. Truett, Investigation of Class 2b Trucks (Vehicles of 8,500 to 10,000 lbs GVWR), ORNL/TM-2002/49, March 2002, Table 16. Class 3 - 8, 2002 Population; Class 2b, 2000 population

DELPHI

Approaches to Fuel Consumption Reduction & Regulations

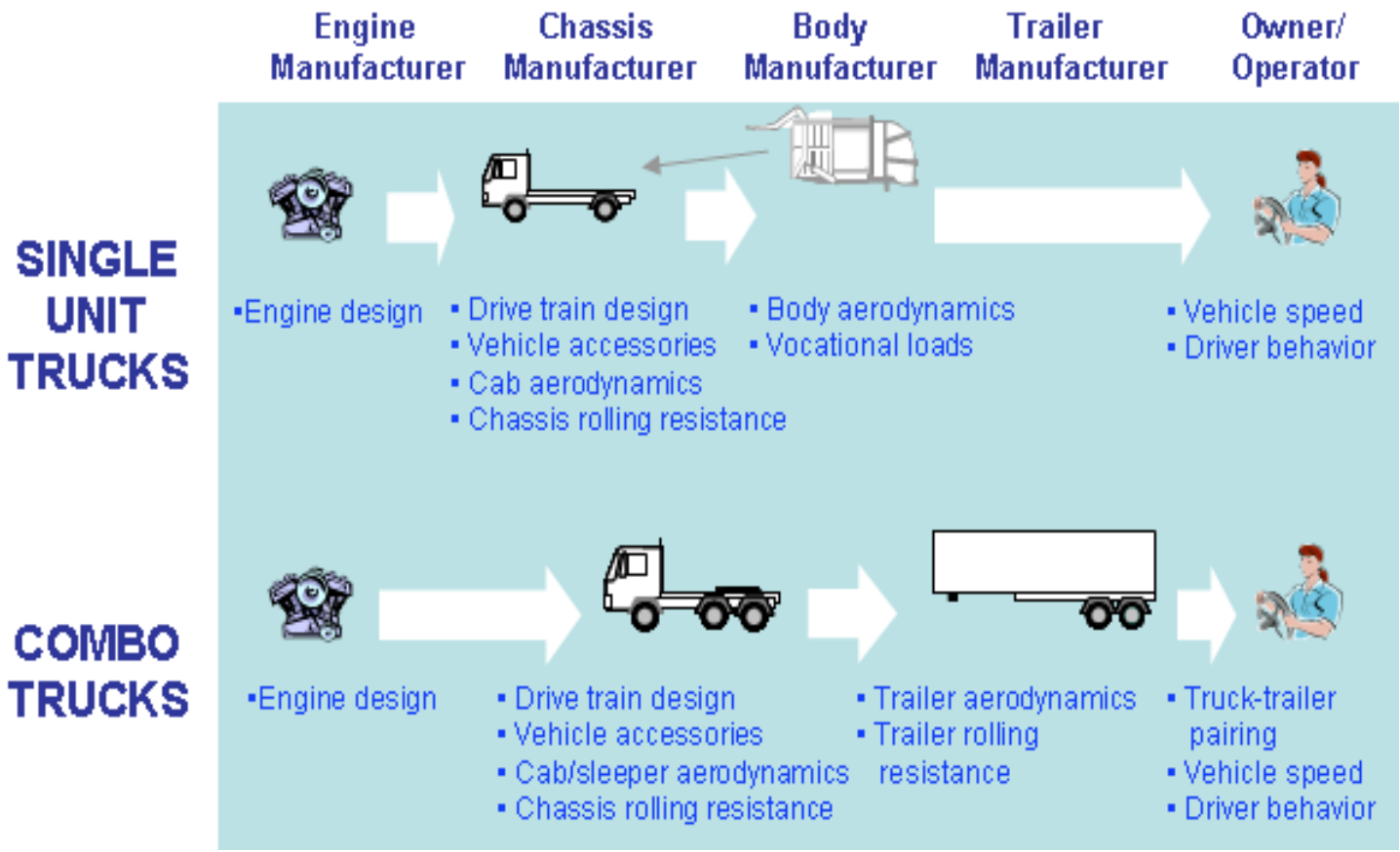

FIGURE 8-1. Shared Responsibility for Major Elements that Effect Heavy-duty Vehicle Fuel Efficiency (ICCT, 2009)

DELPHI

Complexity of the Total Vehicle

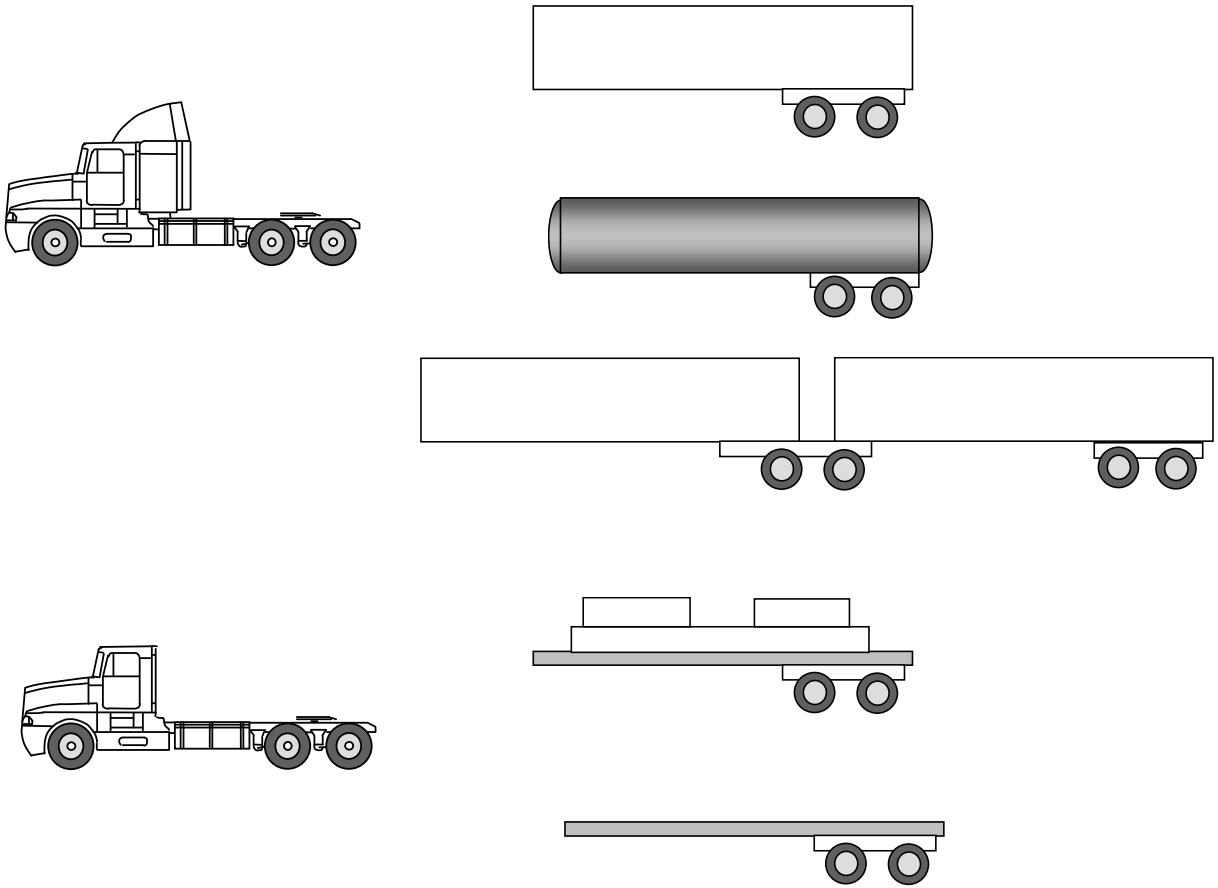

DELPHI

Complexity of the Total Vehicle

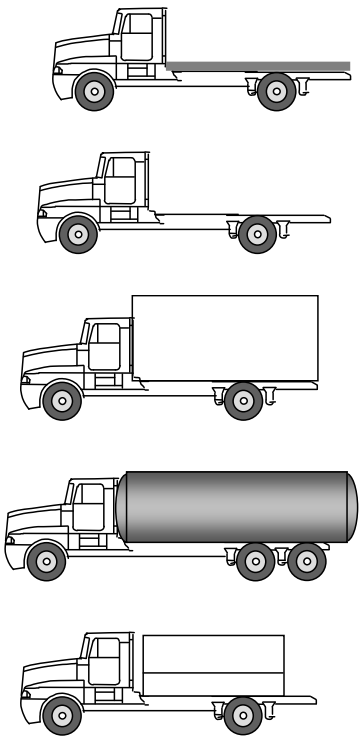

Plus many more truck options

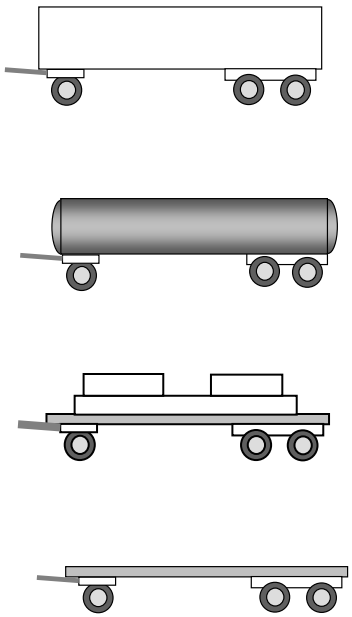

Plus many more trailer options

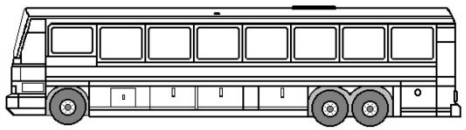

All bus types

DELPHI

Metrics for Fuel Consumption

Guiding principles for metrics

- Metrics should incentivize subcomponent and total vehicle development
- Metrics should relate to the transport task or vehicle vocation
- Metrics should encourage energy conservation for a given task
- Metric should be based on energy or fuel consumption – i.e. equivalent diesel gal/cargo ton-mile
  - Fuel type used will likely change over time
  - energy density varies with fuel type

DELPHI

Cube vs Mass
50/50

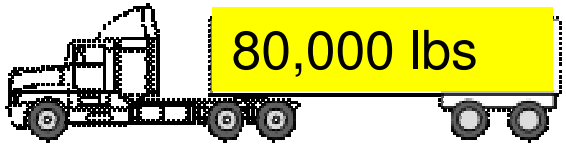

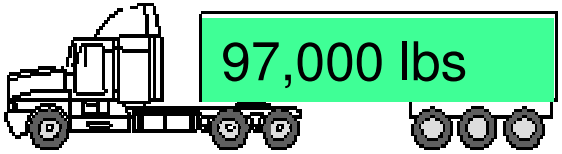

Vehicle "A" *Identical trailer volume* Vehicle "B"

Cargo capacity 48,000 lbs
Best suited for cargo weights
48,000 lbs or less

Cargo capacity 61,000 lbs
Best suited for cargo weights
greater than 48,000 lbs

- If the "mass" metric were applied, vehicle B would always outperform vehicle A – mass metrics (gal/ton mile) promote heavier vehicles

- Need a volume-based metric (gal/cargo ft^3-mile) for low density freight vehicles that accounts for the value of cargo volume

DELPHI

Advantages & Disadvantages of Each Choice of Regulated Party

TABLE 8-2. Advantages and Disadvantages of Each Choice of Regulated Party.

Regulated Entity	Advantages	Disadvantages
Engine manufacturer	• Utilizes existing regulatory framework for criteria pollutants: test cycle (though current cycles may need updating), engine tests, compliance testing. • Manageable number of regulated parties. • Low administrative burden.	• Misses the bulk of potential improvements in drivetrain, hybrids, tires, aero, vehicle accessories, component integration, improved design. • Does not include trailer
Powertrain integrator	• Captures hybrid systems and transmission packages when the dynamic powertrain system is broader than engine. • Builds on existing regulatory framework of engine tests and cycles. • Allows vehicle and trailer attributes to be covered by simulation with test cycles. • Reduces need for full vehicle testing.	• May require two or more industry entities to define the powertrain hardware as team. New business model in some cases. • Will require upgrades to certification engine cell controls to accommodate range of vehicle load inputs and hybrid drivetrain components.
Final stage vehicle manufacturer	• Includes nearly all vehicle parameters that affect fuel use in single heavy-duty vehicles. • Manageable number of regulated parties.	• Class 8 trailers and bodies of vocational trucks not included. • Higher administrative costs to develop test cycles, conduct vehicle testing, perform certification and compliance testing.
Fleet owner Vehicle owner	• Allows for greater range of operational improvements (driver training, intermodalism).	• Unmanageable number of regulated entities (hundreds of fleets: half of heavy-duty vehicles in fleets of less than 10 trucks). • Would still require mandatory fuel efficiency testing of HDVs to provide fleet owners with information required to make smart compliance decisions.

DELPHI

Approaches to Fuel Consumption Reduction & Regulations

Recommendation 8-1. When NHTSA regulates, it should regulate the final stage vehicle manufacturers since they have the greatest control over the design of the vehicle and its major subsystems that affect fuel consumption. Component manufacturers will have to provide consistent component performance data. As the components are generally tested at this time, there is a need for standardized test protocol and safe guards for the confidentiality of the data and information. It may be necessary for the vehicle manufacturers to provide the same level of data to the tier suppliers of the engines, transmissions, after-treatment and hybrid systems.

Recommendation 8-3. NHTSA should establish fuel consumption metrics tied to the task associated with a particular type of medium or heavy vehicle, and set targets based on potential improvements in vehicle efficiency and vehicle or trailer changes to increase cargo carrying capacity. NHTSA should determine whether a system of standards for full but lightly loaded ("cubed-out" vehicles can be developed using only the LSFC metric or whether these vehicles need a different metric to properly measure fuel efficiency without compromising the design of the vehicles.

DELPHI

Methods for Certification and Compliance

- "Direct regulation" of fuel consumption is complicated and very challenging - (must avoid unintended consequences)

- "Indirect methods" – fuel tax, speed limiters, liberalized size and weight

It's all about "transport efficiency"

All of these options can contribute

DELPHI

Approaches to Fuel Consumption Reduction & Regulations

TABLE 8-3. Options for Certification of Heavy Duty Vehicles to a Standard.
Source: Modification of Table 7.3, MJ Bradley, Setting the Stage, ICCT, 2009

Method	Equipment	Advantages	Disadvantages
In-use Test (Complete vehicle)	400 – 600 mile test course(s) on public roads	•Easy to conduct •Relatively inexpensive •Well-developed procedure •Familiar with HDV Fleets •SAE Procedures	•High test-to-test variation including driver differences, ambient conditions, and traffic variations •Best for comparing one truck to another •Requires the use of a "reference truck" to limit test-to-test variability
Test Track (complete vehicle)	Closed, 1 – 5 mile oval or circular test track	•Easy to conduct •Good repeatability	•Facilities are limited and expensive •Complexity of test cycles limited •Best for high-speed steady state test cycles •Cannot incorporate changes in grade to test cycle •Affected by ambient conditions •Requires "reference truck" to reduce test-to-test variability

DELPHI

Approaches to Fuel Consumption Reduction & Regulations

Method	Equipment	Advantages	Disadvantages
Chassis dynamometer	Heavy-duty chassis dynamometer with data from a Coast down test track	• Well developed procedure • Computerized drivers' aids ensure very good compliance with transient test cycles • Very good repeatability	• Facilities are limited and expensive • Accuracy depends on accurate input data from coast down test • Coast down data not reliable • Inability to handle variable grade
Engine test plus vehicle simulation modeling	Engine dynamometer Vehicle simulation model	• Well developed test • Minimal additional burden • Lowest total cost to vehicle manufacturers • Ability to run large number of vehicle test cycles off a single engine test	• Accuracy depends on complexity of simulation model and "accuracy" of model inputs • Development of vehicle specific modeling parameters likely to require additional vehicle / component testing (i.e. wind tunnel tests for aero drag, tire tests).

DELPHI

Approaches to Fuel Consumption Reduction & Regulations

Method	Equipment	Advantages	Disadvantages
Powertrain test plus vehicle simulation modeling	Engine dynamometer that will accommodate hybrid powertrain hardware and model/cycle control (CIL) Vehicle simulation model	• Builds on current practice of engine dynamometer tests • Ability to accommodate many cycles and vehicles via models • Facilitates harmonization with pollutant emission certification	• New business model may be needed to integrate engine and other powertrain components • Process development required for integration of simulation into regulatory framework. (see above).
Simulation of entire vehicle	Vehicle simulation model	• Ability to accommodate many cycles and vehicles via models	• Still requires substantial testing for model development and validation • Models not adequate to cover regulated pollutants, so emissions test still required

SOURCE: Modified from Bradley and Associates (2009).

DELPHI

Component Method

Power unit governed by performance

Distinct energy consuming elements

System integration and analysis

Final stage manufacturer

Power train

Aerodynamics

Tires

→

Base Vehicle Assembly

→

Point of Final Regulation

Standard performance evaluation

Optimized integration

Final fuel performance evaluation

DELPHI

Approaches to Fuel Consumption Reduction & Regulations

Recommendation 8-4. The committee recommends that use of simulation modeling with component test data and additional tested inputs from Powertrain tests could lower cost and administrative burden yet achieve needed accuracy of results. This is similar to the approach taken by Japan, but with the important clarification that the program would represent all the parameters of the vehicle (Powertrain, aerodynamics and tires) and relate fuel consumption to the vehicle task. The committee further recommends that the combined vehicle simulation / component testing approach be supplemented with tests of complete vehicles for audit purposes.

Recommendation 8-5. Congress should appropriate money and NHTSA should implement as soon as possible a major engineering contract that would take several actual vehicles covering several applications and develop the approach to component testing data in conjunction with vehicle simulation modeling to arrive at LSFC data for these vehicles. The actual vehicles should also be tested by appropriate full scale test procedures to confirm the actual LSFC values and the reductions measured with fuel consumption reduction technologies as compared to the more cost effective fleet certification approach.

DELPHI

Concluding Recommendation – Pilot Program

Recommendation 8-6.

NHTSA should conduct a pilot program to "test drive" the certification process & validate the regulatory instrument proof of concept. It should have these elements.

- Gain experience with certification testing, data gathering, compiling, and reporting. There needs to be a concerted effort to determine the accuracy and repeatability of all the test methods and simulation strategies that will be used with any proposed regulatory standards, and a willingness to fix issues that are found.

- Gather data on fuel consumption from several representative fleets of vehicles. This should continue to provide a real world check on the effectiveness of the regulatory design on the fuel consumption of trucking fleets in various parts of the marketplace, and in various regions of the country.

DELPHI

Congressional & Agency Reviews

- Report delivered to NHTSA & Congress by March 17th
- Comprehensive reviews conducted with NHTSA, EPA & DOE (April – July)
- DOE 21st Century Truck Program including EPA, DOT, NAS (May 18th)
- SAE Commercial Vehicle Council update (June 8th)
- White House Executive Staff review conducted (May 4th)

  Involving Council of Economic Advisors, Council on Environmental Quality et al.
- Individual updates & reviews held

DELPHI

DELPHI

Regulatory Announcement

October 25, 2010

United States Environmental Protection Agency

NHTSA
www.nhtsa.gov

Office of Transportation and Air Quality
EPA-420-F-10-901
October 2010

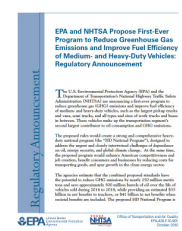
EPA and NHTSA Propose First-Ever Program to Reduce Greenhouse Gas Emissions and Improve Fuel Efficiency of Medium- and Heavy-Duty Vehicles: Regulatory Announcement

Regulatory Announcement

Medium-and Heavy-Duty Vehicles GHG and Fuel Efficiency NPRM

- EPA/NHTSA joint rulemaking which covers three categories
  - Combination tractors
  - Heavy-duty pickups and vans
  - Vocational vehicles
- Standards GHG and fuel consumption
  - Combination tractors
    - » Begin 2014 MY and achieve up to 20% reduction by 2018 MY
  - Heavy-duty pickup trucks and vans
    - » Separate Standards for Gas and Diesel
      - Gas
        - Begin 2014 MY and achieve up to 10% by 2018 MY
        - 12% if accounting for air conditioning leakage
      - Diesel
        - Begin 2014 MY and achieve up to 15% by 2018 MY
        - 17% if accounting for air conditioning leakage
  - Vocational Vehicles
    - » Begin 2014 MY and achieve up to 10% by 2018 MY
- Agencies estimate will provide $41 B in net benefits, save 500 million barrels of oil, and reduce GHG emissions by 250 MMT over model year lifetime (2014-2018)

DELPHI

Heavy-Duty Pickup Trucks and Vans

- Similar to approach as light-duty vehicles
  - Depends on sales mix
  - Higher capacity vehicles (payload and towing) less stringent
  - Added adjustment for 4-wheel drive
- EPA will propose target curves based on a “work factor”
- Stringency would increase each model year from 2014-2018
- 2018 includes separate standard to control air conditioning leakage
  - Average per-vehicle GHG reduction of 17% Diesel
  - Average per-vehicle GHG reduction 12% Gas
- NHTSA fuel consumption standard equivalent to EPA’s proposal (not including A/C leakage)
  - Average per-vehicle improvement in fuel consumption of 15% Diesel
  - Average per-vehicle improvement in fuel consumption of 10% Gas
  - Alternative phase in approach of
    - 15-20-40-60-100 % in MYs 2014-2015-2016-2017-2018
    - 15-20-67-67-67-100 % in MYs 2014-2015-2016-2017-2018-2019

DELPHI

Combination Tractors

Table 1: Proposed MY 2017 Combination Tractor Standards

	EPA Emissions Standards (g CO2/ton-mile)			NHTSA Fuel Consumption Standards (gal/1,000 ton-mile)		
	Low Roof	Mid Roof	High Roof	Low Roof	Mid Roof	High Roof
Day Cab Class 7	103	103	116	10.1	10.1	11.4
Day Cab Class 8	78	78	86	7.7	7.7	8.5
Sleeper Cab Class 8	64	69	71	6.3	6.8	7.0

DELPHI

Vocational Vehicles

Table 2: Proposed MY 2017 Vocational Vehicle Standards

	EPA Full Useful Life Emissions Standards (g CO2/ton-mile)	NHTSA Fuel Consumption Standards (gal/1,000 ton-mile)
Light Heavy Class 3-5	344	33.8
Medium Heavy Class 6-7	204	20
Heavy Heavy Class 8	107	10.5

DELPHI

Program Flexibilities for Manufacturer Compliance

- Engine averaging, banking, and trading (ABT)
  - Provides for emissions and or fuel credits to be averaged, banked or traded
    - Only within each subcategory
    - Cannot be transferred across categories
- Option of CO2 credits to offset CH4 or N2O emissions
- Early credit option
- Credit program to promote advanced technologies such as;
  - Hybrid Powertrains
  - Rankine Cycle Engines
  - Electric or Fuel Cell vehicles
- Credit to apply new innovative technologies that test procedure doesn't capture (ie. Off-Cycle Credits)

DELPHI

Commentary/ Public Hearings

- The deadline to submit comments is January 31st
- Two Public Hearings Held
  - November 15 – Chicago, IL
  - November 18 – Boston, MA

DELPHI